Yorba Linda Power Plant Modifications

Engineering & Operations Committee
Item 8-11
March 12, 2012

Current Action

- Appropriate $5.43M in budgeted funds
- Award $3.67M contract to James Leffel & Co. to procure turbine-generator for the Yorba Linda Power Plant

Location Map

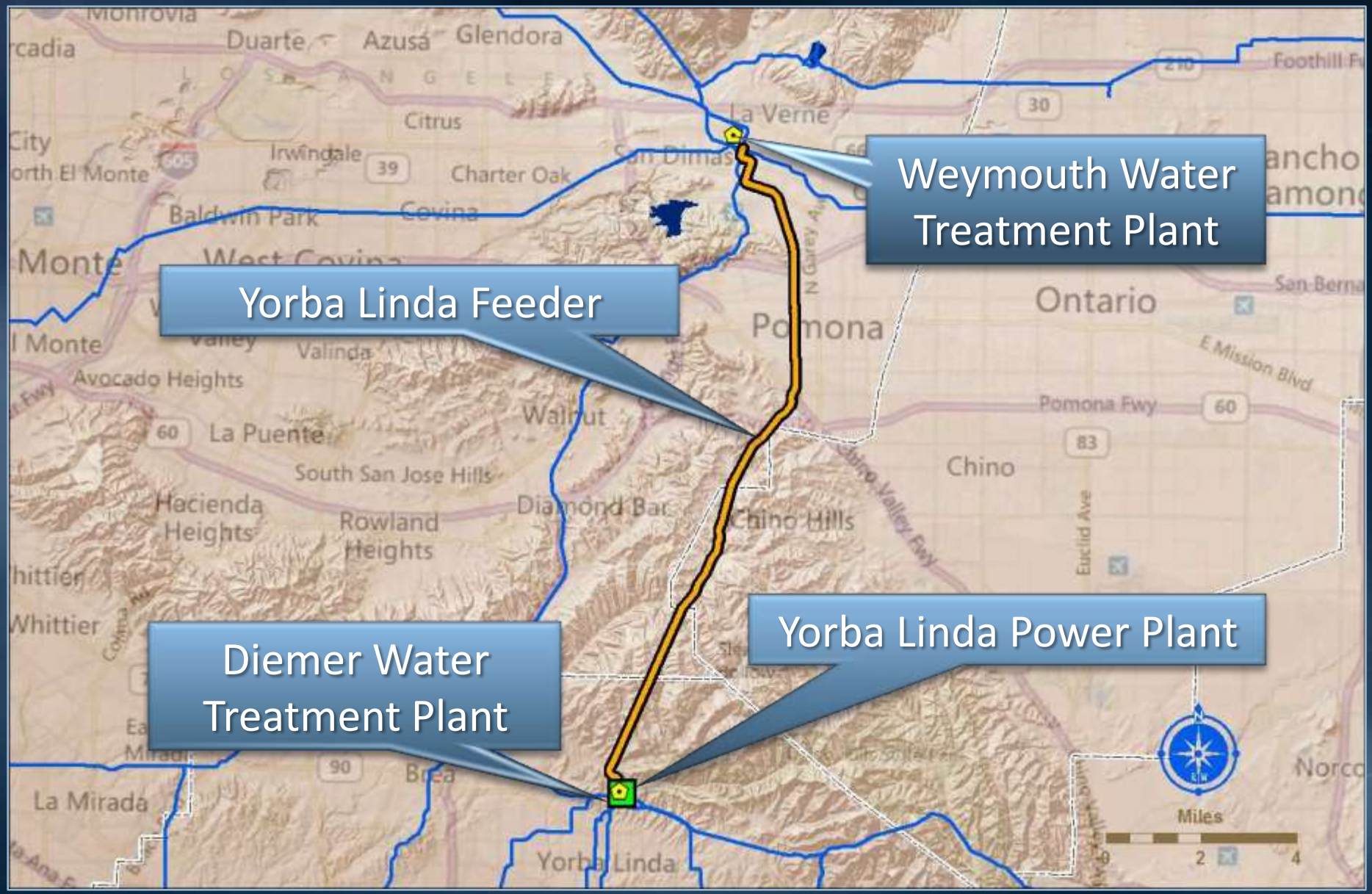

Robert B. Diemer Water Treatment Plant

Yorba Linda Power Plant

- Power plant completed 1981
- 5.1 MW, pelton wheel (impulse-type) turbine
- $1M-2.5M annual revenue

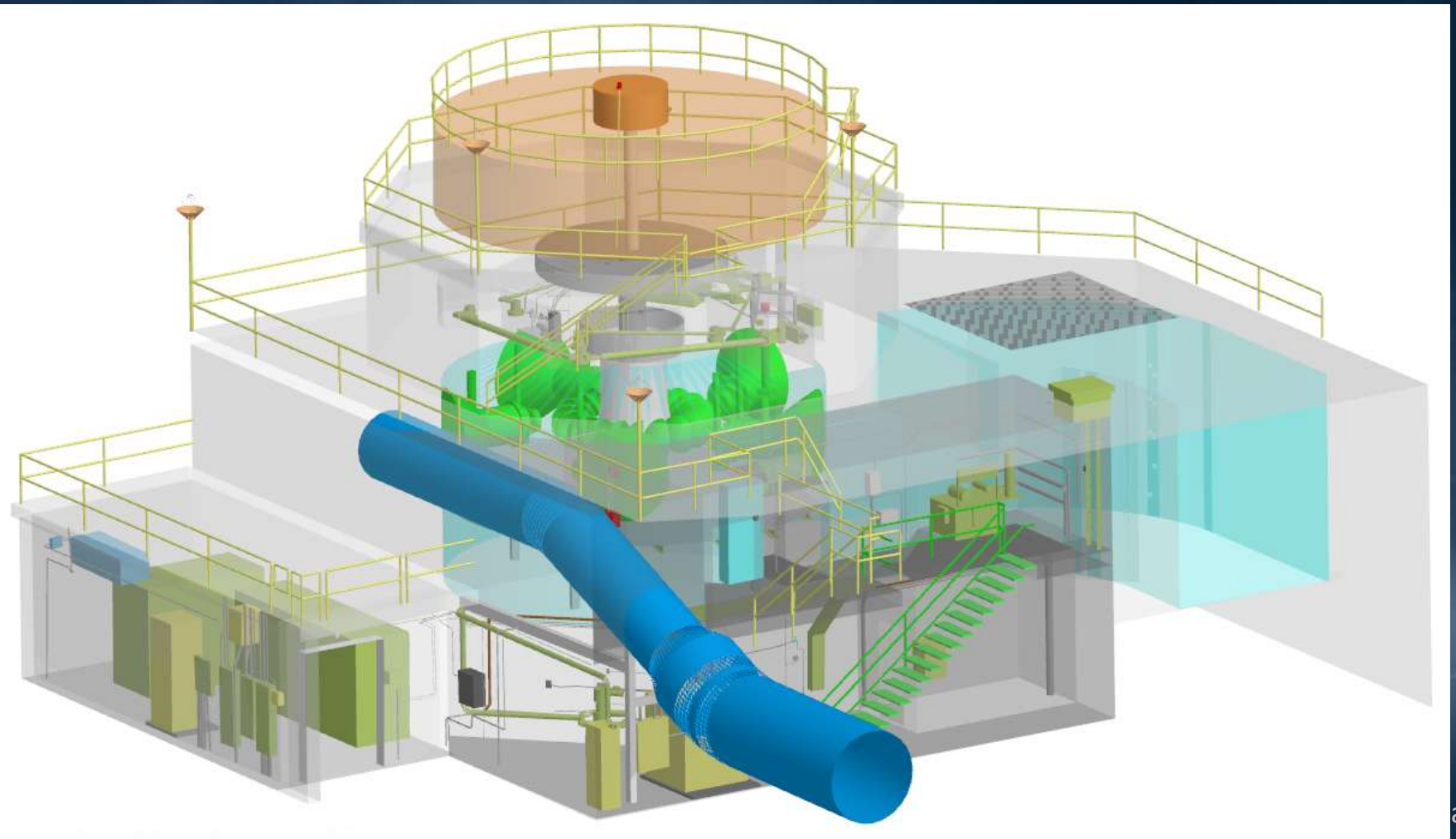

Background

- Project planned in conjunction with ORP
- Plant removed from service in January 2012 when raw water routed through new ozone contactors
- New turbine design optimized for post-ORP hydraulic conditions
  - New turbine will be slightly more efficient

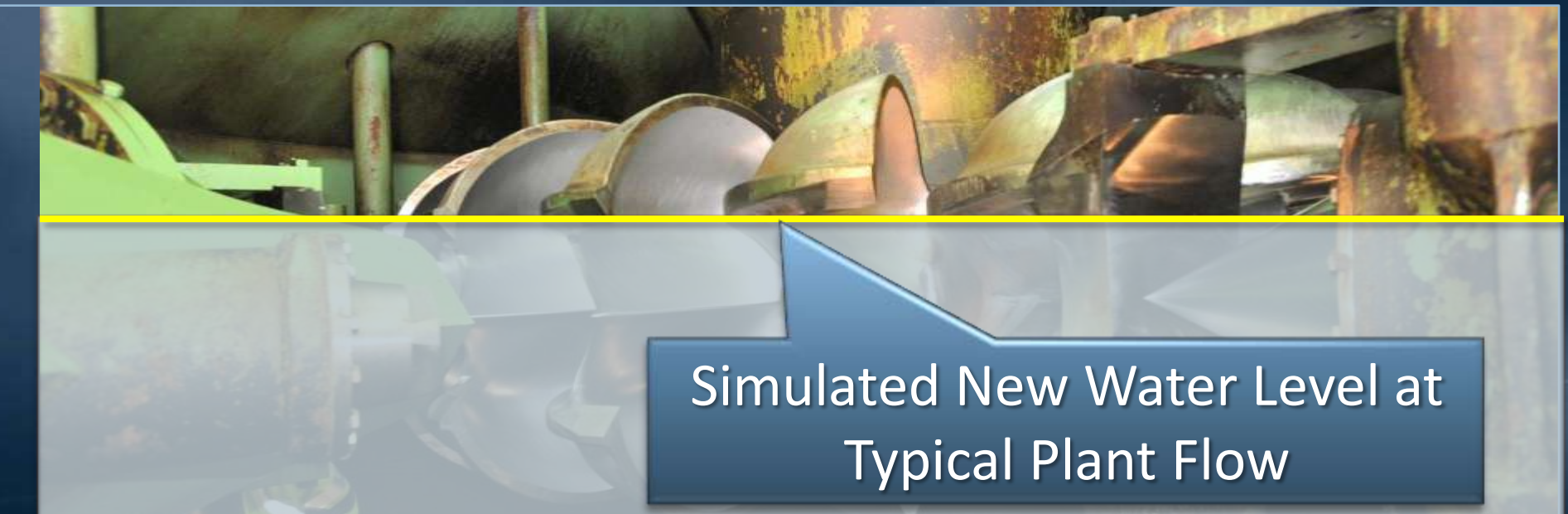

3D Survey

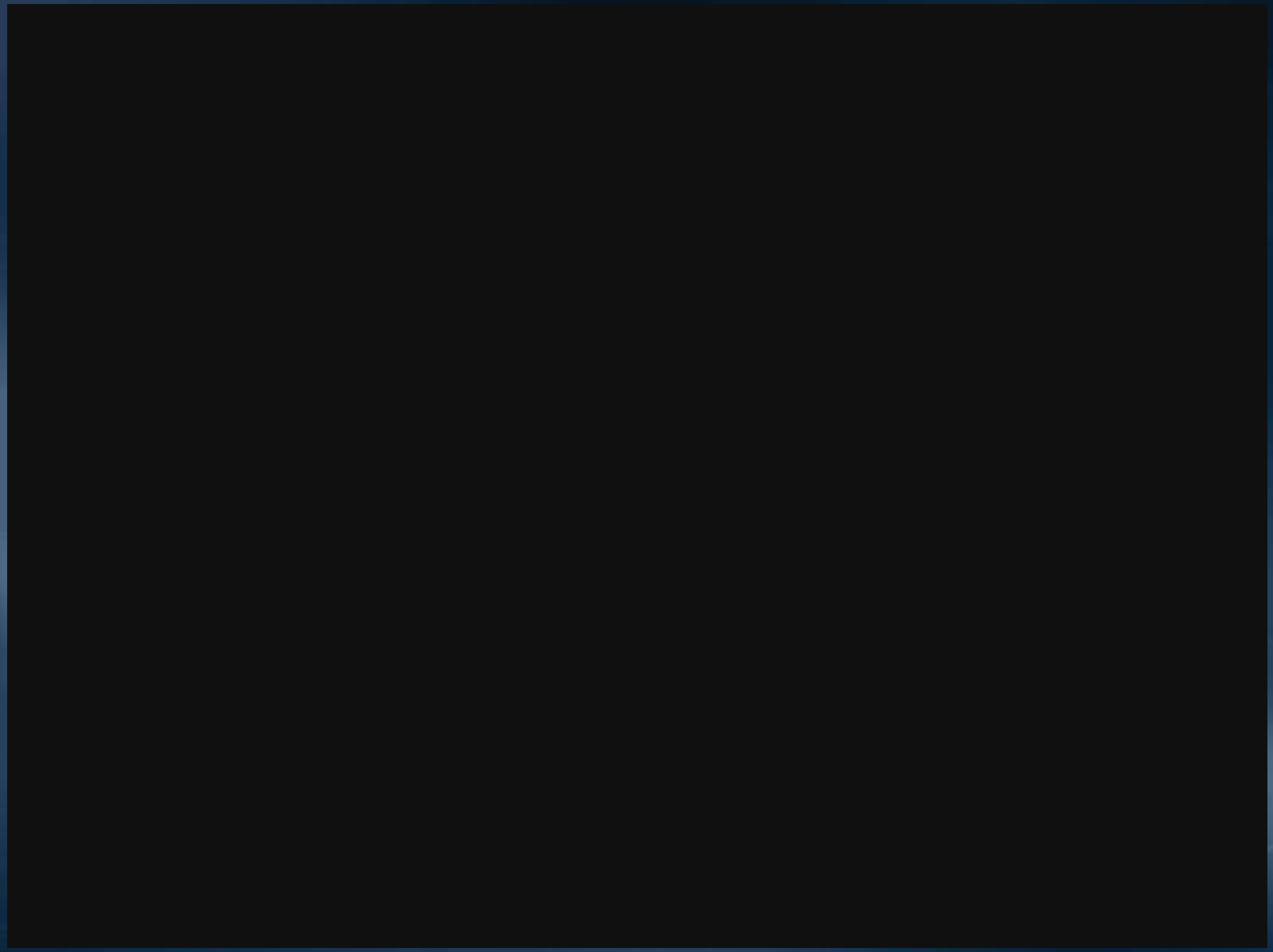

Scope of Work

- Procure turbine (Francis-type) & generator
- Design existing facility for vendor-specific features
- Fabrication inspection, testing & engineering support

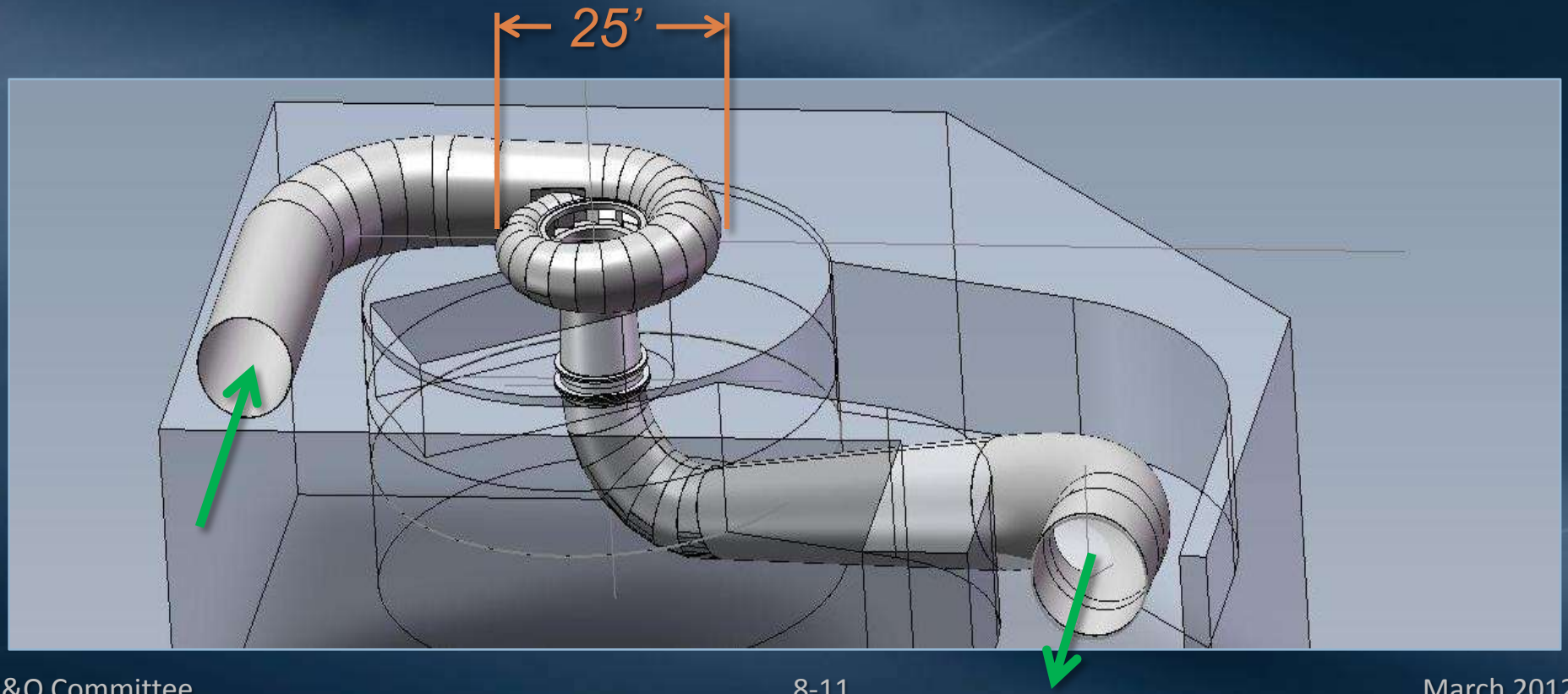

Best-Value Procurement Method

- Request for proposal (RFP):
  - Incorporated long-term guaranteed power generation into selection process
  - Allowed negotiation of business terms individually
  - Encouraged design innovation
- Evaluation criteria
  - Capital cost & generation efficiency
  - References & past experience
  - Quality of technical proposal

Proposal Results

RFP-969

Proposals received	October 3, 2011
No. of proposals	5
Best-value proposal	James Leffel & Co., Springfield, OH
Proposal amount*	$3,954,425
Engineer's estimate	$4,000,000
SBE participation	100%

* CA taxes included

Requested Funds

Final Design	$204,000
Fabrication Inspection	396,575
Submittal reviews	257,000
Contract Admin, Project Mgmt	171,000
Contract	3,670,000
Taxes	284,425
Remaining Budget	447,000
Total	$5,430,000

Schedule

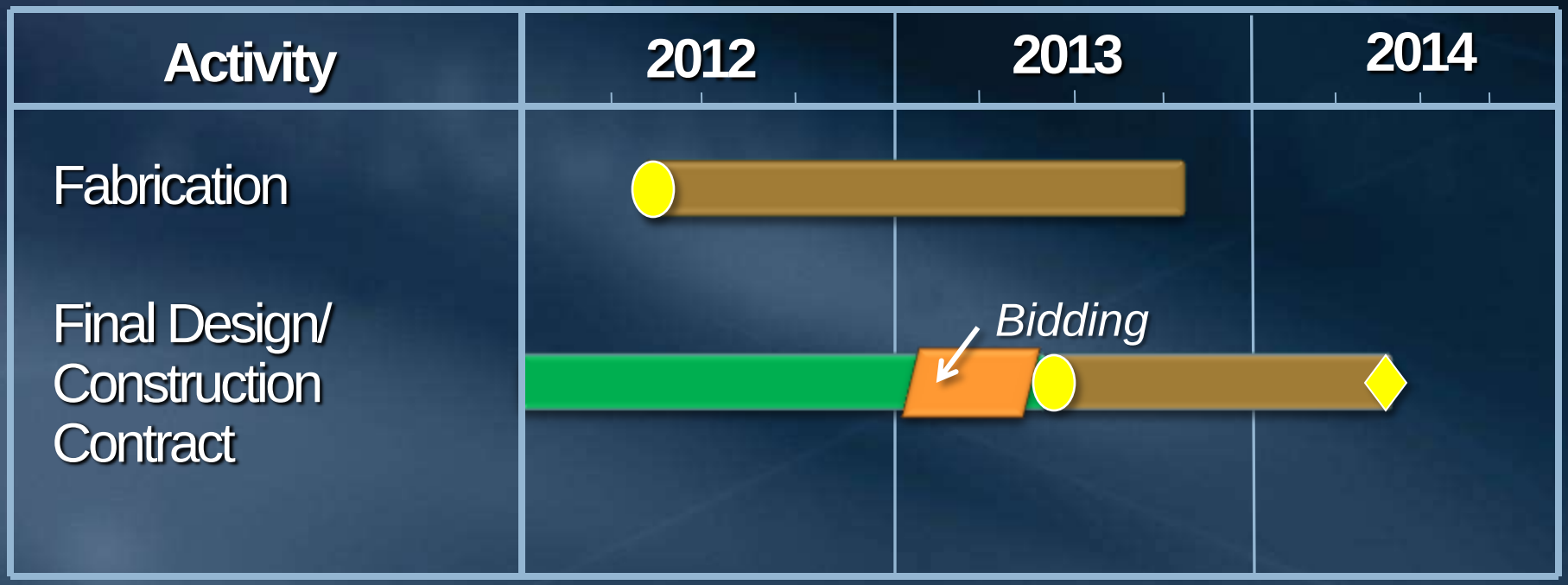

Final Design

Construction

Board Action

Project Completion

Board Options

- Option #1
  - Adopt CEQA determination
  - Appropriate $5.43M in budgeted funds
  - Award $3.67M procurement contract to James Leffel & Co.
- Option #2
  - Do not award the contract & re-advertise

Staff Recommendation

- Option #1

THE METROPOLITAN WATER DISTRICT OF
SOUTHERN CALIFORNIA
1928